NEXTHERM

SENSING

High Flux. High Value.

User Manual

Cooled heat flux sensor

CHF Series

Warnings

The sensor must not be powered. Applying a voltage greater than 12V to the wiring terminals can lead to irreversible damage to the sensor.

Using a sensor without active cooling can cause irreversible damage to the sensor.

When following standard operating procedures, users should obtain their own copies of the standard. This manual provides only general operating guidelines.

Disassembling the sensor can lead to a loss of integrity of its metrological and mechanical functions and will void the manufacturer's warranty.

Nextherm Sensing performs traceable calibrations using its own procedures but is not an ISO 17025 accredited laboratory.

Table of Contents

List of Symbols 4
Introduction 5
Calibration 8
1. Inspection upon delivery 9
1.1 Package content 9
1.2 Quick check of the instrumentation 9
2. Specifications 10
3. Installation 14
3.1 Liquid cooling 15
3.2 Electrical connection & metrological considerations 16
4. Surface radiation compensation 18

List of Symbols

S	Sensitivity [mV per kW/m²]
T	Temperature [°C]
U	Voltage or electromotive force (EMF) [mV]
Φ	Heat flux density [kW/m²]

Introduction

This document constitutes the operating procedure for the CHF (Cooled Heat Flux) Series sensors. CHF sensors are designed for continuous measurement of high (> kW/m²) to extremely high (> MW/m²) heat flux densities thanks to an actively cooled body. Cooling is achieved either by tap water supply or by means of a closed-loop thermostatic circuit.

CHF sensors are based on a unique design developed by Nextherm Sensing, relying on differential temperature measurement within a calorimetric element. When exposed to an external heat flux, a thermal gradient develops inside the calorimetric element. This gradient is directly proportional to the applied heat flux, regardless of the cooling conditions (coolant flow rate and temperature).

The sensing element incorporates a proprietary thermoelectric circuit generating an output voltage (electromotive force) through the Seebeck effect. This unique architecture, unmatched on the market, delivers a signal linearly proportional to the incident heat flux density.

Featuring a high thermal conductivity copper-alloy sensing element and a fully stainless-steel housing, CHF sensors are robust and capable of withstanding the most demanding environments.

CHF heat flux sensors are available in three configurations depending on the heat flux component to be measured: total, convective or radiative heat flux. For radiative measurements, a sapphire window (other optical materials available upon request) eliminates the convective contribution. For total and radiative measurements, the sensing surface receives a high-absorptivity coating. Conversely, convective versions feature a highly reflective surface treatment to minimize incident radiation absorption. Nextherm Sensing has conducted extensive R&D work to identify, evaluate and qualify the most suitable surface treatments in terms of both performance and long-term durability.

As an option, CHF sensors can integrate a Type K thermocouple for sensing surface temperature monitoring.

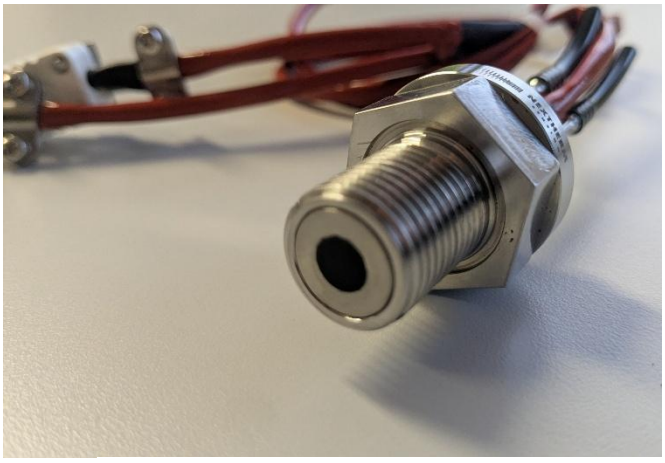

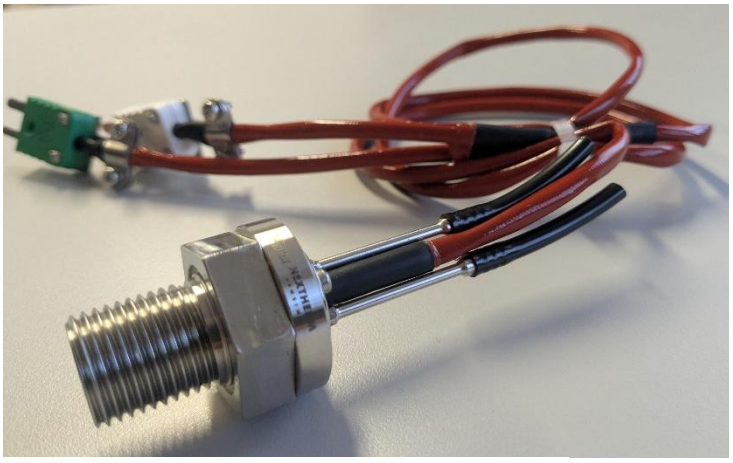

Fig.1 Example of CHF Series sensor: total heat flux version with threaded mounting

Implementing CHF heat flux probes is very simple: just connect the sensor wiring to a voltage recorder, then connect the cooling ports (3.4 mm diameter grooved tubes) to a liquid circuit. The heat flux density is then derived in real time from the electrical measurement.

Depending on your application, several mechanical interfaces are available as standard. A custom interface can also be developed to meet your specific requirements. Standard interfaces are either flanged (reference M1) or threaded (reference M2), as illustrated in the following drawings:

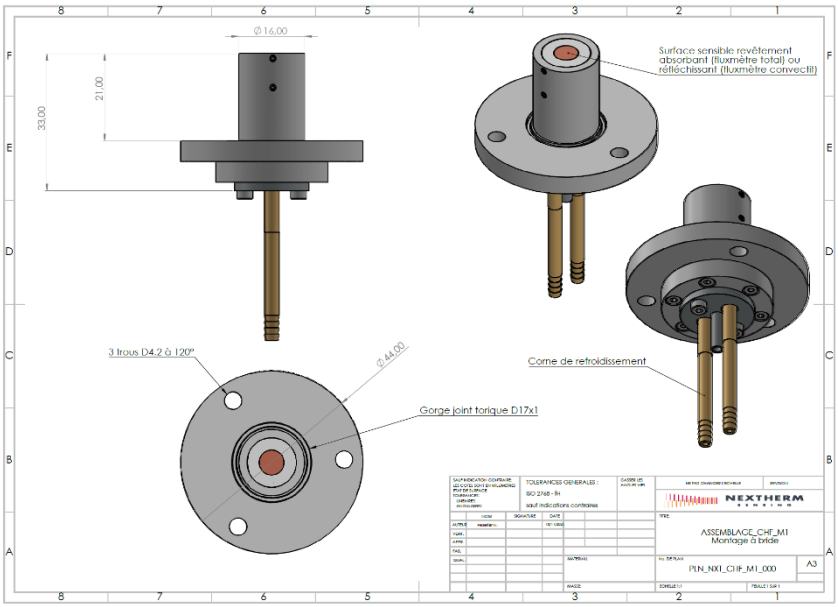

Fig.2 CHF heat flux sensor with three-hole flange-mounting interface at 120° (reference M1)

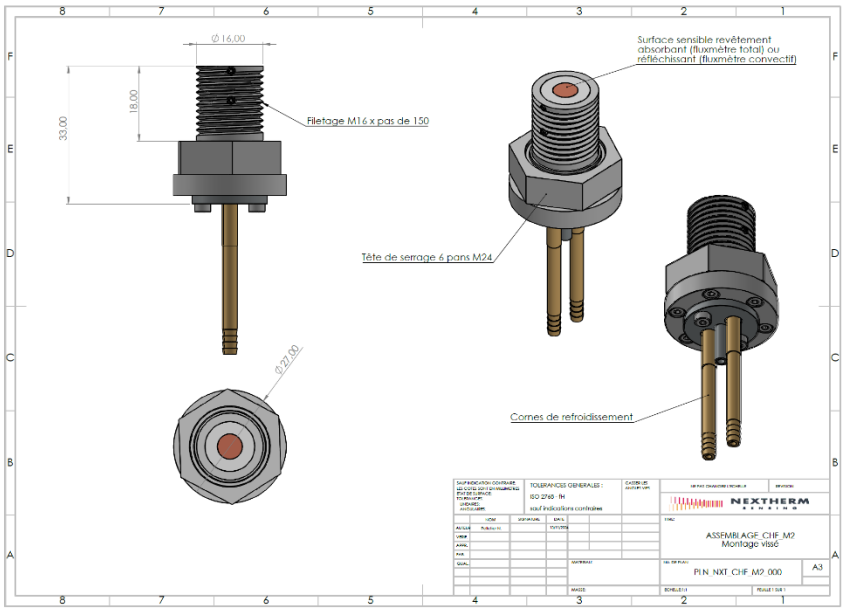

Fig.3 CHF heat flux sensor with M16 threaded mounting interface (reference M2)

Calibration

CHF heat flux sensors are calibrated using a high-power laser calibration bench. This proprietary calibration method developed by Nextherm Sensing offers several advantages over conventional blackbody-based calibration approaches:

- Extremely wide heat flux range (from a few kW/m² to several MW/m²)
- Thermal cycling characterization
- Response time determination through controlled exposure duration
- Fast setup without warm-up phase
- Accurate power control
- Excellent source stability and uniformity

Unlike conventional approaches relying on secondary reference sensors calibrated against primary standards, Nextherm Sensing performs direct calibration, thereby avoiding cumulative uncertainty sources. Several power levels are applied to refine the calibration law and, when required, cover the full measurement range of the sensor.

Each sensor is calibrated over the heat flux range specified by the customer according to an internal calibration procedure. Upon request, accredited calibration can be performed through the French National Metrology Laboratory (LNE) or equivalent institution in your country.

Nextherm Sensing recommends annual recalibration. During recalibration, the overall condition of the sensor, including the sensing surface, is inspected and refurbishment may be proposed if necessary.

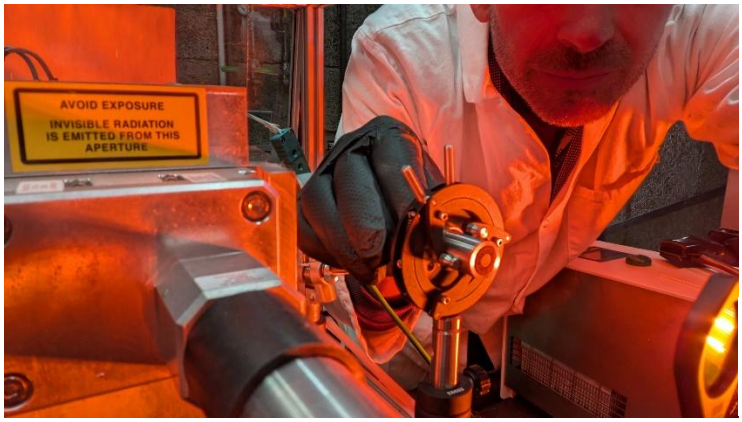

Fig.4 Laser-bench calibration is a unique approach developed by Nextherm Sensing

1. Inspection upon delivery

1.1 Package content

Upon receipt of your CHF sensor, please check that:

- The sensor is fitted with a protective cap to safeguard the sensitive surface against damage during transport or handling
- The wiring is intact and equipped with its flat-pin connector
- The label attached to the wiring is present and bears the same serial number as the one engraved on the back of the sensor
- The calibration certificate is included with the sensor and these operating instructions in your package

1.2 Quick check of the instrumentation

A quick check of the sensor can be performed by connecting it to a tester (multimeter):

1. Check the electrical continuity (beep) of the "flux" signal output wiring.

2. Check the electrical continuity (beep) of the control thermocouple signal output wiring (if this option is present on your model).

3. Remove the sensor's protective cap and inspect the aspect of the sensing surface. It must be uniform and clean, free of marks or scratches.

4. If the sensor is a radiative model equipped with a window, check its cleanliness. If necessary, clean it gently while dry using a lint-free, optical-grade cloth.

5. Verify that, with no flux applied to the sensing surface, the voltage (EMF) output by the sensor is zero.

6. Test the sensor's response to excitation by briefly exposing it (for a few seconds at most) to a heat source (e.g., a heat gun). The response should manifest as a (positive) rise in the voltage or temperature signal.

2. Specifications

The sensors of the CHF Series measure a heat flux density collected over a sensing surface, expressed in W/m², kW/m² or MW/m² (calibration certificates are provided in kW/m²).

Our heat flux sensors are passive (they require no electrical power supply) and have been miniaturized as much as possible to demonstrate low intrusiveness and to minimize disturbance to the thermal source itself. They can also be more easily integrated into systems such as engines, reactors, industrial lines, etc., compared to bulkier competing products.

At Nextherm Sensing, the selection of the flux range is very straightforward, as we can cover a wide range of requirements (from kW/m² to MW/m²) with only a few models.

The CHF sensors are designed for continuous operation, without thermal drift.

The table on the following pages summarizes the technical specifications of the CHF heat flux sensors.

Tab.1 List of specifications for CHF Series heat flux sensors

CHF Series specifications	
Sensor type	Cooled heat flux sensor (total, convective or radiative)
Measured quantity	Heat flux density [W/m²] Option : front-face temperature [°C]
Measurand	Voltage (electromotive force) [mV]
Sensor technology	Thermal gradient heat flux sensor
Rated measurement ranges	Four ranges available: 250 kW/m², 500 kW/m²,1 000 kW/m² (1MW/m²) and 5 000 kW/m² (5 MW/m²)
Measurement range limit	+150% of rated measurement range
Sensing area diameter	6 mm (4mm for CHF_5M)
Output signal	Voltage [mV]
Typical sensitivity	• 250 kW/m² range: >20 µV per kW/m² • 500 kW/m² range: >10 µV per kW/m² • 1 000 kW/m² range: >6 µV per kW/m² • 5 000 kW/m² range: >1 µV per kW/m²
Conversion law	$\Phi(t) = \frac{U(t)}{S}$

Required readout	• 1 x voltage channel for heat flux • Option : 1 x thermocouple (Type K) channel for control temperature
Rated operating temperature range	• -30 to +500 °C (sensor, front face) • -30 to +250 °C (sensor body) • -30 to +250 °C (cable and connector)
Use in vacuum	Suitable for use in primary (~10^{-3} bar) and secondary (~10^{-6} bar) vacuum. Sensor can show outgassing
Use under pressure	Maximum pressure in operation: 30 bar abs (limited to 10 bar abs for 250kW/m² range)
Non-linearity	Measured on full-scale range by calibration: <2%
Sensing area emissivity	• Radiative and total sensor: $\epsilon > 0.90$* • Convective sensor: $\epsilon < 0.05$ ** Spectral emissivity curve provided*
Full field of view	• Convective and total sensor: 180° (no window) • Radiative sensor: 120° (with window)
Response time	<200ms (measured by laser stimulation)
Typical sensor resistance	<500Ω. Does not influence signal under standard high-input-impedance acquisition conditions
Required power supply	0 W (passive sensor)
Standard cable length	1m00
Standard cable finish	High-temperature silicone-lined fiberglass braided sheath
Sensor marking	Serial number on label on the wiring + engraving on sensor
Gross weight	<0.2 kg standard cable included
Water cooling	
Cooling method	Tap water or thermostatic circulating bath
Maximum cooling pressure	10 bar
Cooling flow rate	0.5 to 1 L/min (30 to 60 L/hr)
Recommended cooling temperature	10 to 30°C No influence of the cooling temperature on the heat flux output
Recommended cooling tube	We recommend the use of silicone or polyethylene tube (ID 3mm x OD 6mm) to be compatible with the convoluted metal tube of the sensor (D3.4mm)

Use without cooling	CHF sensors can operate without cooling for a limited time provided the control temperature is monitored and kept below 400°C
Use in testing Recommended applications	• Fire reaction testing: Flammability of construction products using a radiant heat source, flame spread, heat release, smoke production, mass loss rate, full chamber testing for surface products, scale model testing, determination of thermal and fire reaction parameters of materials, products, and assemblies using an intermediate-scale calorimeter (ICAL) • Fire reaction testing of facades - Intermediate and large scales • Fire reaction testing of floor coverings - Determination of fire behavior using a Radiant heat source • Test method for determining the flame penetration resistance of cargo compartment linings • Standardized test method for oxyacetylene ablation testing of thermal insulation materials • Combustion bench tests (turbomachinery, rocket engines, hydrogen reactors, etc.) • Green energy (solar concentrators, etc.)
Installation and use Typical conditions of use	Academic Research, R&D, and industry Systems exposed to high heat fluxes for periods ranging from several seconds to several hours. Connected to user-supplied data acquisition equipment. Regular inspection of the sensor surface, body, wiring, and cooling hose. Continuous monitoring of sensor temperature and water supply. No special requirements for immunity, emissions, or chemical resistance.
Repair of the sensitive surface	It is possible to restore the surface finish if damaged. Recalibration is highly recommended

Calibration	
Calibration certificate	Supplied with each sensor, including test conditions
Calibration method	Laser bench calibration according to internal procedure. Minimum 3 power levels distributed across the calibration range.
Calibration accreditation	Nextherm Sensing is not accredited. Certified calibration is available through LNE or equivalent
Calibration uncertainty	<5% (k=2)
Calibration frequency	Minimum: annual (no calibration alteration during prolonged storage) Recommended: after each measurement campaign
Measurement accuracy	
Uncertainty of measurement	Statements regarding overall measurement uncertainty can only be made on a case-by-case basis.
Versions & Options	
Measurement range	250, 500, 1 000 et 5 000 kW/m². More on request
Radiative flux option	1mm-thickness sapphire window without anti-reflective coating. 85% light transmission over the range [0.2-4.2] µm
Thermocouple to coaxial cable	Thermocouple (flat plugs) to coaxial (BNC) converter

3. Installation

Some recommendations are provided here for the optimal installation of the CHF heat flux sensor.

Tab.2 List of installation recommendations for CHF Series heat flux sensors

Implementation according to standards	If tests must be conducted in accordance with a standard, refer to it and adapt procedures accordingly
Sensor orientation	The sensor is functional regardless of its orientation in space
Protective cap	Ensure the protective cap is placed on the sensor when not measuring, to minimize the risk of damage to the sensing surface
Liquid cooling	Use tap water or water from a thermostatic bath. Refer to the dedicated chapter in this manual
Electrical connection	The output signal from the heat flux sensor (and optionally the monitoring thermocouple) is a low-level voltage (<100 mV). No external power supply is required. Connect the cable(s) to a data acquisition (DAQ) system. Refer to the chapter on electrical connections
Signal handling	Refer to the chapter on electrical connections
Mechanical mounting	Depending on the version (M1 or M2), the sensor can be mounted using three screws spaced at 120° (flange mounting, reference M1) or by screwing it into a threaded mount (M16 x 1.5 threaded mounting, reference M2)
Thermal protection	Protect the sensor body and cabling as much as possible to minimize damage and parasitic thermal effects

3.1 Liquid cooling

CHF Series sensors are equipped with 3.4 mm diameter barbed cooling ports. These ports must be connected to the cooling circuit:

- either to a tap (open-loop/drain-to-waste system);
- or to a thermostatically controlled loop (circulating bath).

Note: The choice of cooling inlet/outlet is arbitrary; either port may be used.

Fig.5 Possible cooling methods: left, open-loop water cooling; right, thermostatic bath setup.

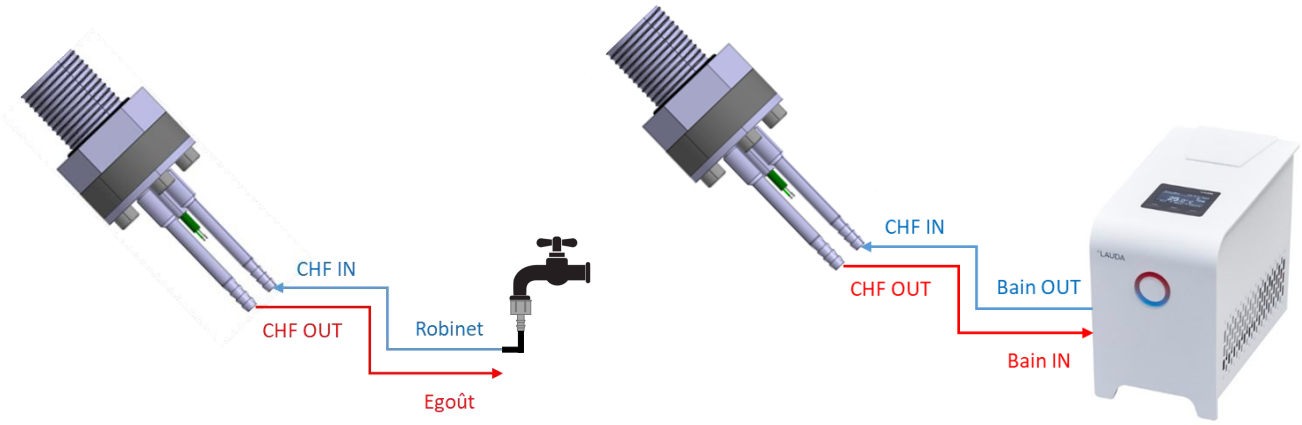

The system's primary pressure losses are caused by the narrowness of the sensor's inlet/outlet ports and dual-body structure. Pipes with a wide range of internal diameters can be installed without compromising cooling performance. However, for long distance, using larger-diameter piping is recommended to compensate for any potential pressure drop in your water circuit (minimum internal diameter of 8 mm).

Fig.6 Heat transfer fluid inlet mounting method (non-limiting examples)

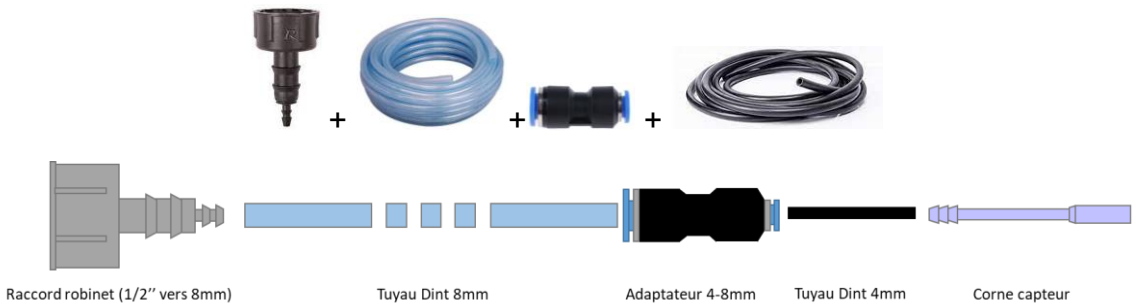

For open-loop cooling, it is useful to check the available water flow rate. It should typically be between 0.5 L/min and 0.8 L/min (i.e., 30 to 50 L/h). This adjustment can be made by simply timing how long it takes to fill a graduated container.

Fig.4 Principe de mesure rapide du débit d'eau perdue

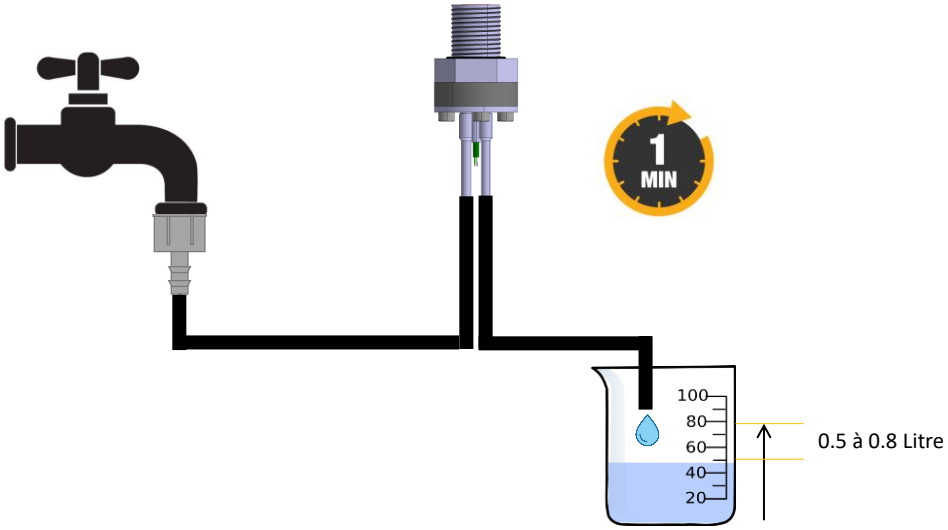

3.2 Electrical connection & metrological considerations

The sensor's output signal is an electromotive force (a voltage of a few tens of millivolts maximum) generated by a thermoelectric arrangement. Measurement is performed by connecting the sensor to a voltage recorder with a maximum range of ±10 V and 16-bit or 24-bit resolution.

The achievable measurement resolution values for the various CHF sensor ranges are listed below (disregarding the quality of the user's measurement line in terms of signal-to-noise ratio), depending on whether the data acquisition system is 16-bit or 24-bit:

	Minimum accessible heat flux	
Measurement range	16 bits	24 bits
CHF-250	13 kW/m²	0,05 kW/m²
CHF-500	23 kW/m²	0,09 kW/m²
CHF-1000	46 kW/m²	0,18 kW/m²
CHF-5000	339 kW/m²	1,32 kW/m²

Resolution with 16 bits DAQ	0,305 mV	(Voltage range: +/-10V)
Resolution with 24 bits DAQ	1,19 µV	

These intrinsic values are determined during calibrations performed at Nextherm Sensing, utilizing an optimized, complete data acquisition chain (cabling, connectors, and acquisition system).

When deploying Nextherm Sensing heat flux sensors, it is essential that your metrological environment adheres as closely as possible to best practices:

- **Reduce measurement noise:** keep cable length to the absolute minimum, use differential acquisition if possible, ensure connectors are clean, use braided-shield cables, and avoid ground loops;
- **Utilize the full dynamic range of the acquisition system:** select a measurement range close to the expected signal level (e.g., +/-1V for a 10mV signal);
- **Optimize the acquisition frequency:** sampling at a rate much higher than necessary often increases measurement noise;
- **Minimize mechanical disturbances:** vibrations, cable strain, micro-movements, or improper mounting can generate signals with levels comparable to the signal of interest;
- **Properly manage the zero point:** once the system has stabilized (sensor installed, thermal environment settled), zero the voltage channel immediately before measurement and check the "blank" noise level.

4. Surface radiation compensation

CHF Series heat flux sensors can be equipped with a front-surface reference thermocouple. This additional measurement provides access to surface radiation compensation

Above a certain temperature, infrared emission from the sensor's sensitive surface can become significant. This phenomenon applies to radiative and total heat flux sensors, for which part of the sensitive surface is blackened and can therefore exchange energy by radiation with its surroundings.
The radiative balance at the sensor surface can be simply expressed as:

$$\Phi_{rad} = \epsilon.\sigma.(T_{env}^4 - T_S^4)$$

where T_{env} and T_s are respectively the environmental temperature and the sensor surface temperature (i.e. its reference temperature).

Two cases may be considered:

- **Sensor exposed to an open field / cold environment:** in this case, the sensitive surface, being hotter than its surroundings, exhibits a net radiative heat loss. Part of the incident heat flux is therefore dissipated by radiation. The compensated incident heat flux can then be calculated as:
  - $\Phi_{comp} = \Phi_{mes} + \epsilon.\sigma.T_S^4 = \frac{U}{S} + \epsilon.\sigma.T_{cont}^4$

where T_{cont} is the control temperature of the heat flux sensor.

- **Sensor exposed to an encompassing hot source (e.g. direct flame):** in this case, radiation received from the hot surroundings compensates for part or all of the radiation emitted by the sensitive surface. The simplified correction described above is therefore not applicable, and no compensation is required within the scope of this approximation.

UE declaration of conformity

We,

Nextherm Sensing SAS
Registered office: 70 Chemin de Cantalauze
31220 Martres-Tolosane
France

In accordance with the requirements of the following directive:

2011/65/EU Restriction of the use of certain hazardous substances in electrical and electronic equipment

We hereby declare under our sole responsibility that:

Product model:	CHF
Product type:	Cooled heat flux sensor
Brand:	Nextherm Sensing

complies with the following applicable European Union harmonization legislation:

Directive 2011/65/EU of the European Parliament and of the Council on the restriction of the use of certain hazardous substances in electrical and electronic equipment (RoHS), including Amendment **(EU) 2015/863**.

Product conformity has been assessed based on internal production controls. The product is designed for use under normal operating conditions in accordance with its technical documentation.

Nicolas Pelletier
Chief Executive Officer
Martres-Tolosane, 29/09/2026

About Nextherm Sensing

Nextherm Sensing is an innovative French company with roots in aerospace Research, specializing in heat flux measurement. Founded in 2022, it offers a wide range of sensors to address a diverse array of academic and industrial challenges.

Attentive to your needs and application constraints, we provide end-to-end support throughout the sensor selection process, from user training and the provision of analysis tools to after-sales service. We also offer a unique recalibration service based on a high-precision laser source.

Founded by two passionate researchers, Nextherm Sensing has innovation and continuous improvement in its DNA. That's why we dedicate a significant portion of our resources to developing new, increasingly robust and high-performing products.

Find us at www.nextherm-sensing.com
Or contact us directly at contact@nextherm-sensing.com

NEXTHERM
SENSING

© Nextherm Sensing
Version 2026
We reserve the right to change the specifications without prior notice.